Cygnet

Collection

Inspired by the warmth and love of family life, the Cygnet collection displays thoughtful elements designed for family comfort in mind. Apart from soft minimalism, the height of the Cygnet toilet is raised to accommodate the needs of the elderly, pregnant members or the disabled. A perfect choice for families who want the bathroom to be a comfortable and inviting place for all.

Cygnet
Close Coupled Toilet
TBC

Washdown
305 mm, S-Trap, 3 / 4.5 Litres
Elongated Bowl

Available colors: White

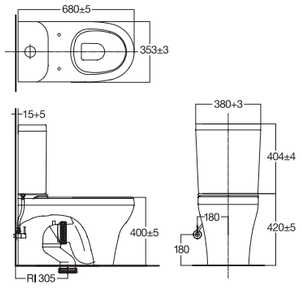

Cygnet
Wall Hung Lavatory
LAX4F2C10-A

W461 x L550 x H180 mm
Siphon trap, flexible hose,
angle valve, drain & rubber plug
must be ordered separately

Available colors: White

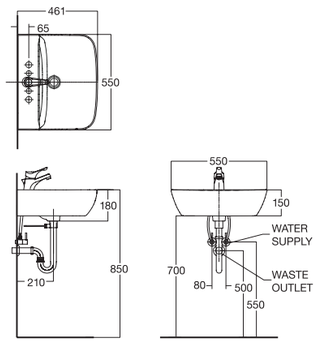

Cygnet
Semi Pedestal Lavatory
TBC

W461 x L550 x H488 mm
Siphon trap, flexible hose,
angle valve, drain & rubber plug
must be ordered separately

Available colors: White

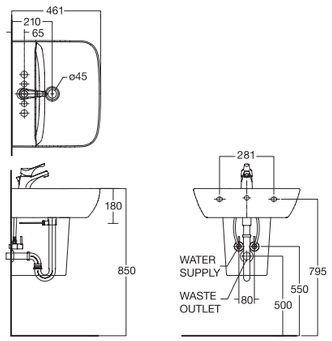

Cygnet
Basin Mixer with Pop Up Drain
F076C002

Included Components: Hose

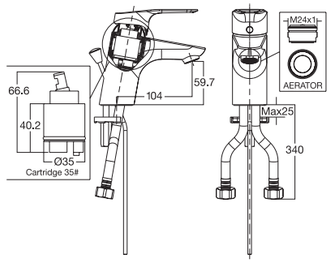

Cygnet
Vessel Mixer
F076C092

Included Components: Hose

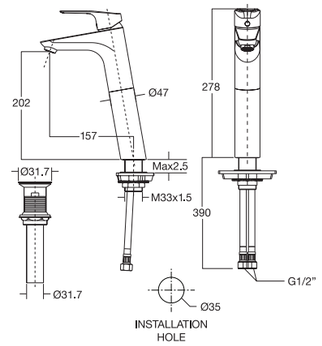

Cygnet
Mono Basin Faucet
with Pop Up Drain
F076C132

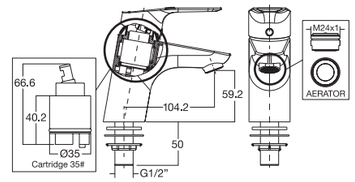

Cygnet
Concealed Bath & Shower Mixer
F076D042

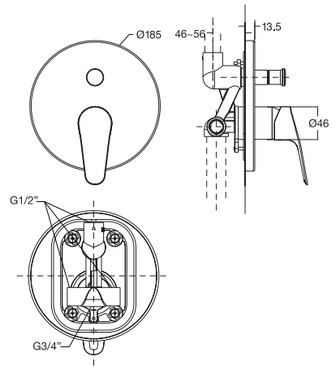

Cygnet
Exposed Bath & Shower Mixer
F076D032

Included Components: Hand Shower

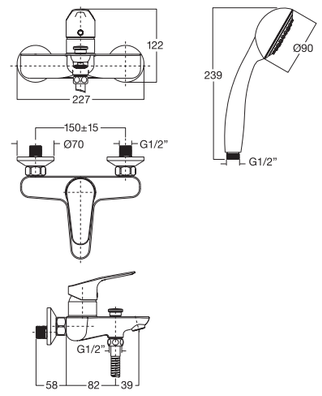

Cygnet
Concealed Shower Mixer
F076E102

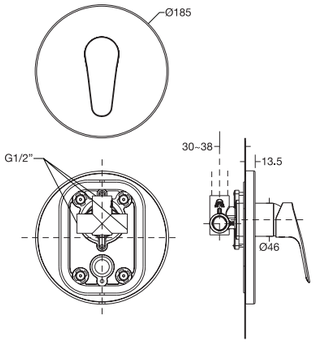

Cygnet
Exposed Shower Mixer
F076E092

Included Components: Hand Shower

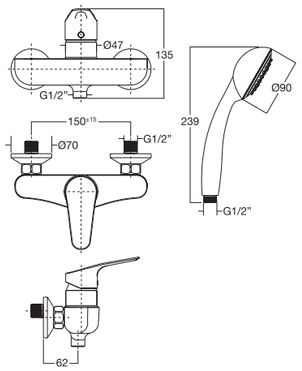
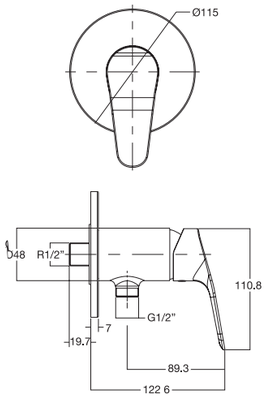
Cygnet
In Wall Mono Shower
F076E133